Product data sheet

Specifications

Green Premium™

Modicon Quantum - high-speed counter module - 8 I - 100000 Hz

140EHC10500

Discontinued on: Dec 31, 2022

To be end-of-service on: Dec 31, 2030

Discontinued

Main

Range Of Product	Modicon Quantum automation platform
Product Or Component Type	High-speed counter module
Number Of Channels	5

Complementary

Number Of Inputs	8
Addressing Requirement	12 output words 12 input words
Data Format	2147483647 dec 32 bits 65535 dec 16 bits
Counting Input Voltage	30 V DC max
Counting Input Current	7 mA
Counting Input Type	Discrete incremental counter
Counting Frequency	100000 Hz
Duty Cycle	1/1 counter input
Discrete Input Current	5 mA
Operating Threshold	15...30 V single ended mode 24 V REF DC at state on 3...5 V single ended mode 24 V REF DC at state off
Discrete Output Number	8
Discrete Output Type	Field Effect Transistor (FET)
Discrete Output Voltage	0 V switch off DC 20...30 V switch on DC
Load Current	0.21 A
Maximum Leakage Current	0.1 mA state off
Maximum Voltage Drop	<1.25 V state on
Isolation Between Channels And Bus	500 Vrms for 60 s
Fault Type	Loss of output field power
Output Short-Circuit Protection	Internal
Power Dissipation	>= 6 W
Bus Current Requirement	250 mA
External Power Requirement	19.2...30 V

List Price displayed is VAT EXCLUSIVE.

Disclaimer: This documentation is not intended as a substitute for and is not to be used for determining suitability or reliability of these products for specific user applications

Rack Type	Local Distributed Remote
Local Signalling	5 LEDs for channel status
Marking	CE
Current Consumption	<= 1140 mA at 24 V DC external power supply
Module Format	Standard

Environment

Resistance To Electrostatic Discharge	4 kV contact conforming to IEC 801-2 8 kV on air conforming to IEC 801-2
Resistance To Electromagnetic Fields	10 V/m 80…1000 MHz conforming to IEC 801-3
Ambient Air Temperature For Operation	0…60 °C
Ambient Air Temperature For Storage	-40…85 °C
Relative Humidity	95 % without condensation
Operating Altitude	<= 5000 m
Standards	UL 508
Product Certifications	RINA UL GOST LR CSA Class 1 Division 2 RRS ABS GL DNV C-Tick

Packing Units

Unit Type Of Package 1	PCE
Number Of Units In Package 1	1
Package 1 Height	4.6 cm
Package 1 Width	16.0 cm
Package 1 Length	31.0 cm
Package 1 Weight	520.0 g
Unit Type Of Package 2	S03
Number Of Units In Package 2	7
Package 2 Height	30.0 cm
Package 2 Width	30.0 cm
Package 2 Length	40.0 cm
Package 2 Weight	4.081 kg

Contractual warranty

Warranty	18 months

Sustainability

Green Premium™ label is Schneider Electric's commitment to delivering products with best-in-class environmental performance. Green Premium promises compliance with the latest regulations, transparency on environmental impacts, as well as circular and low-CO_2 products.

Guide to assessing product sustainability is a white paper that clarifies global eco-label standards and how to interpret environmental declarations.

Learn more about Green Premium >

Guide to assess a product's sustainability >

RoHS/REACh

Well-being performance

Reach Free Of Svhc	
Mercury Free	
Rohs Exemption Information	Yes

Certifications & Standards

Eu Rohs Directive	Pro-active compliance (Product out of EU RoHS legal scope) EU RoHS Declaration
China Rohs Regulation	China RoHS declaration
Weee	The product must be disposed on European Union markets following specific waste collection and never end up in rubbish bins
Circularity Profile	End of Life Information

Dimensions Drawings

Racks for Modules Mounting

Dimensions of Modules and Racks

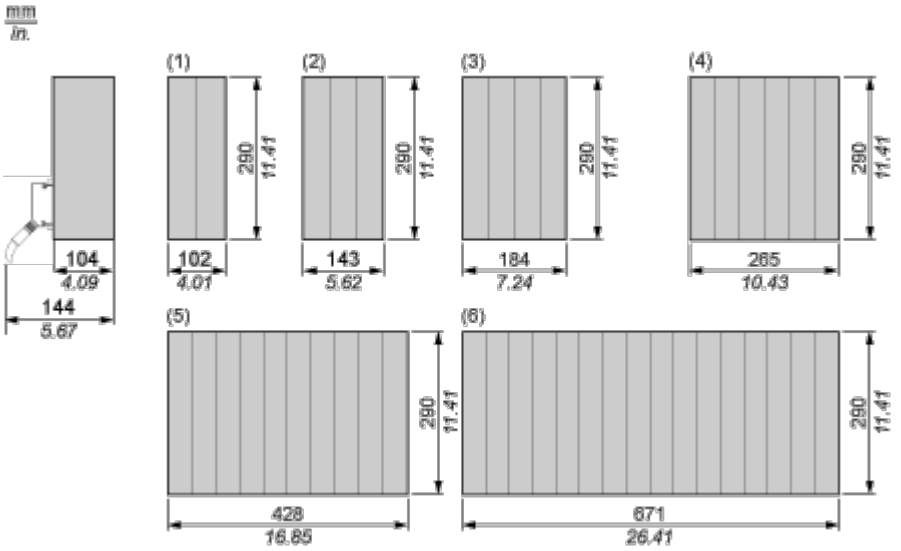

(1) 2 slots

(2) 3 slots

(3) 4 slots

(4) 6 slots

(5) 10 slots

(6) 16 slots

Connections and Schema

Five-Channel Discrete High Speed Counter

Wiring Diagram

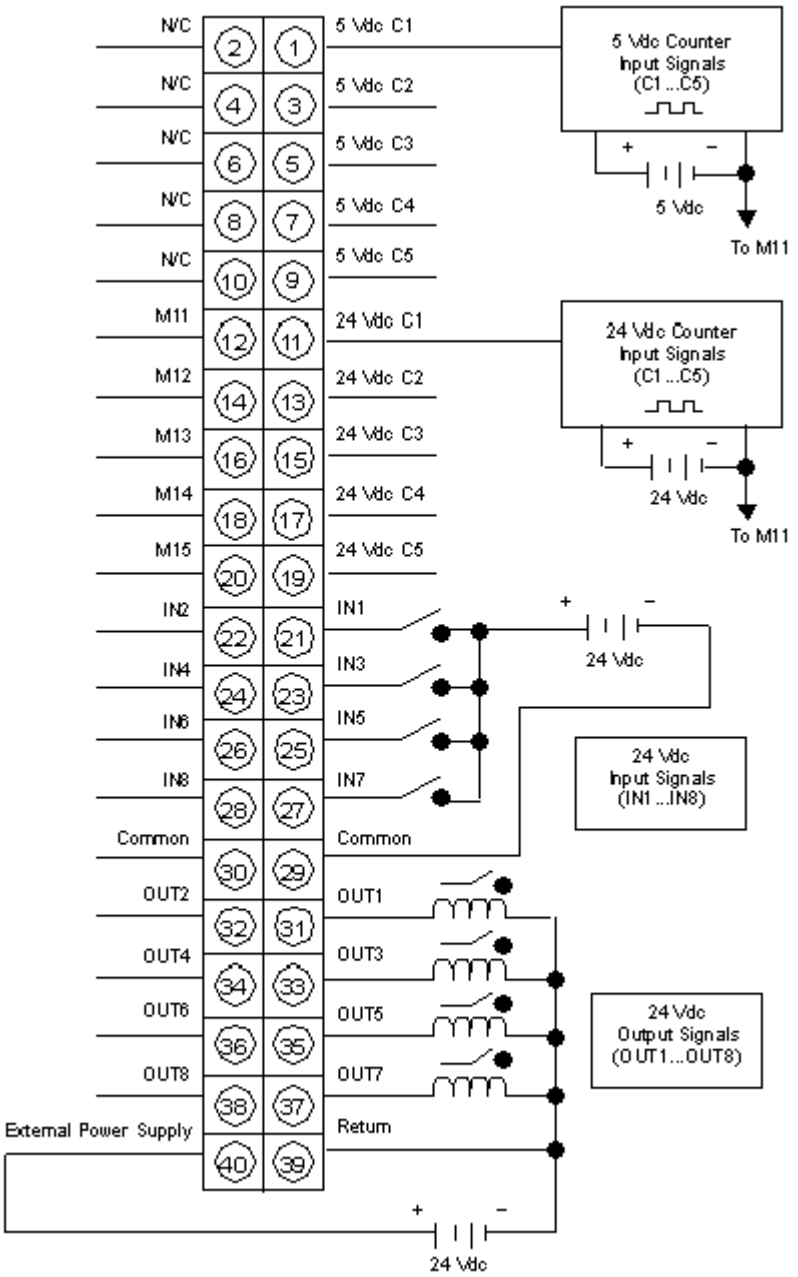

N/C Not Connected

Terminals 29 and 30 are jumpered together.